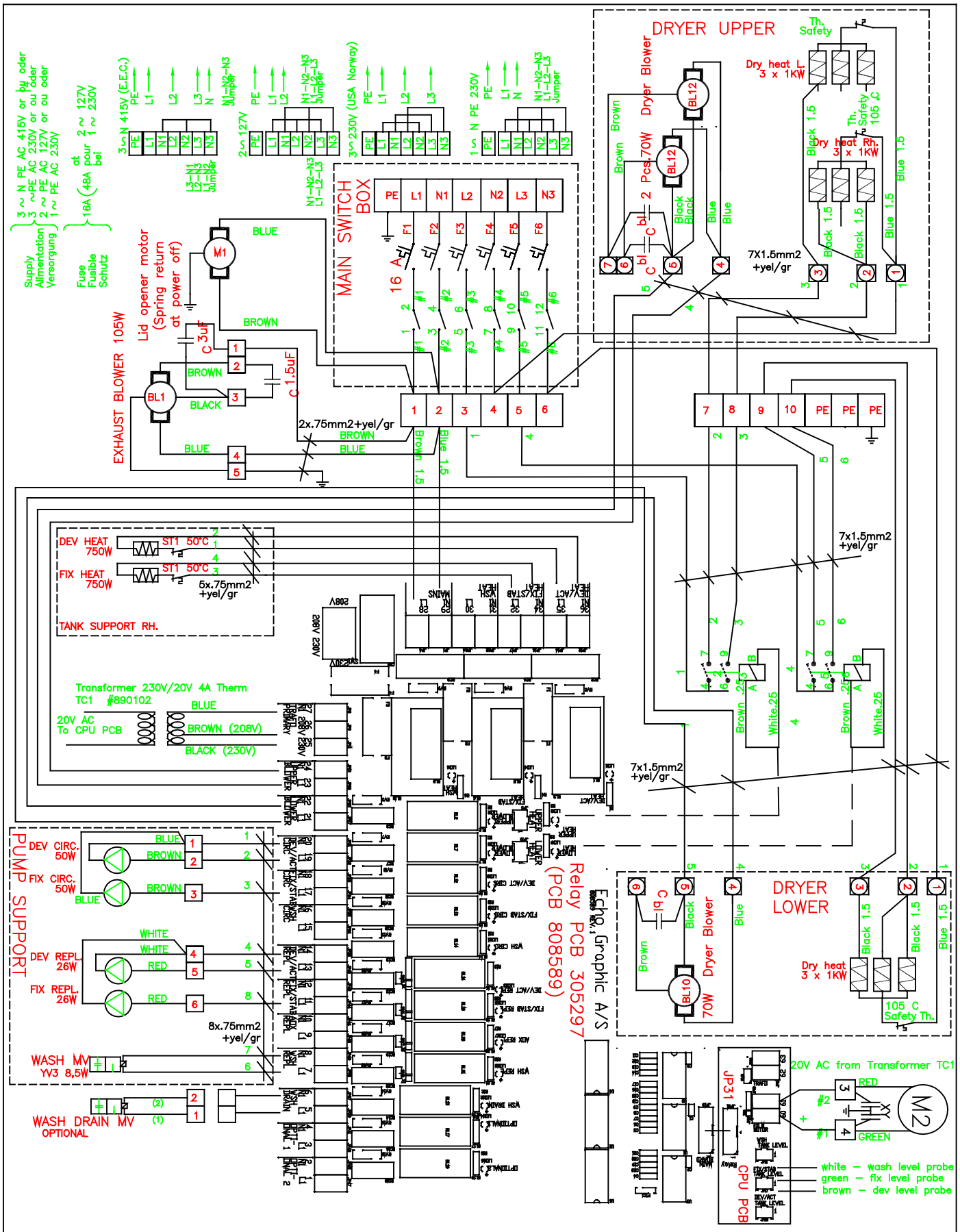

See also Block diagram 6359

Echo Graphic A/S Haandvaerkervej 2 DK-9560 Hadsund, Denmark Phone int.: +45 98 57 19 55 Fax int.: +45 98 57 15 91	Design/Draw : CV	Scale : :	Date : 10-01-02
	Name Interconn. diagram EG 1140		Drawing no. : 6360 –