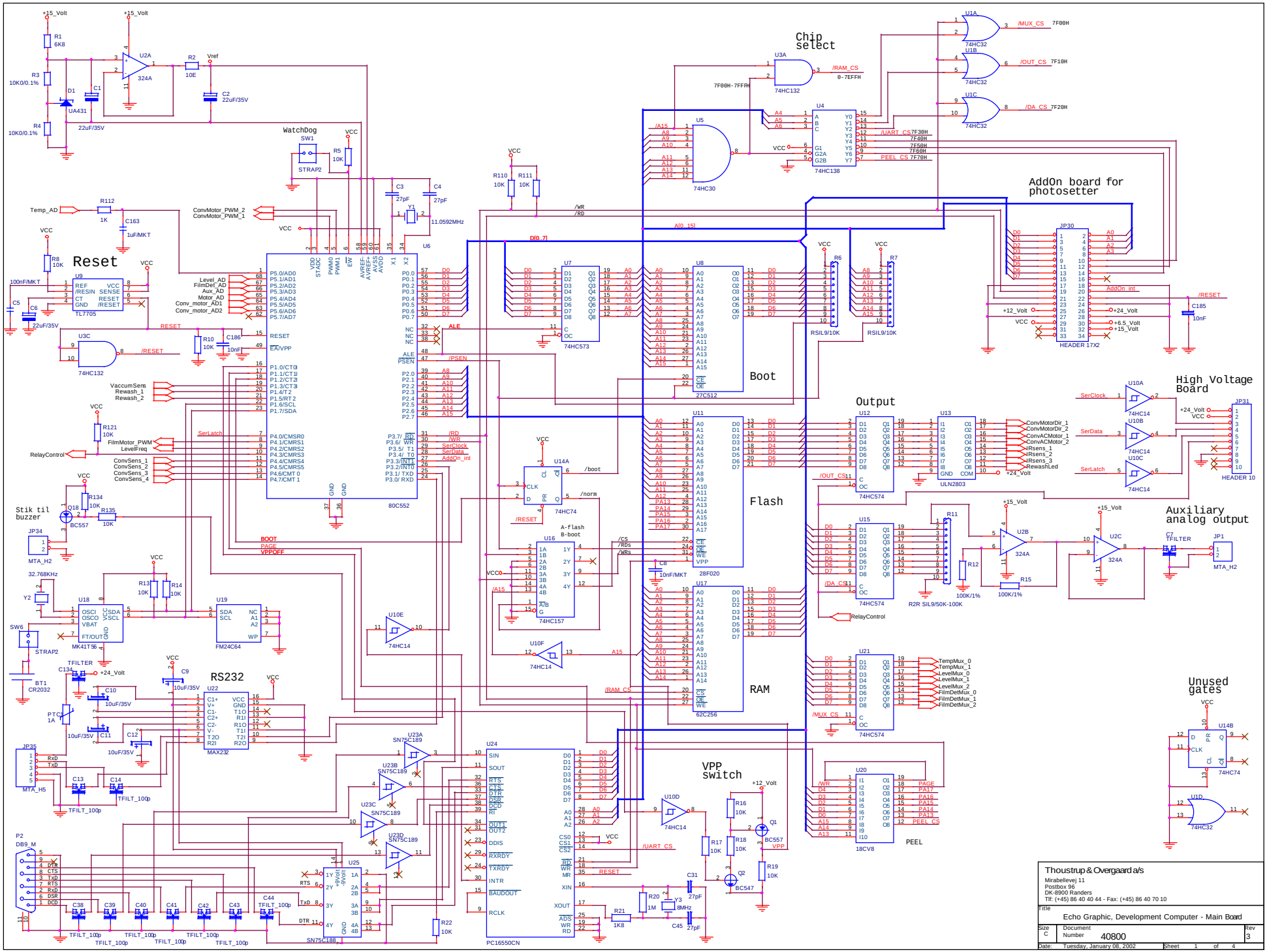
Reset
Chip select
AddOn board for photosetter
Boot
Flash
RAM
Output
High Voltage Board
Auxiliary analog output
Unused gates
RS232
VPP switch
PEEL
WatchDog
80C552
PC16550CN
Stik til buzzer
Thoustrup & Overgaard a/s
Mirabellevej 11
Postbox 96
DK-8900 Randers
Tlf: (+45) 86 40 40 44 - Fax: (+45) 86 40 70 10
Title
Echo Graphic, Development Computer - Main Board
Size C
Document Number 40800
Rev 3
Date: Tuesday, January 08, 2002
Sheet 1 of 4