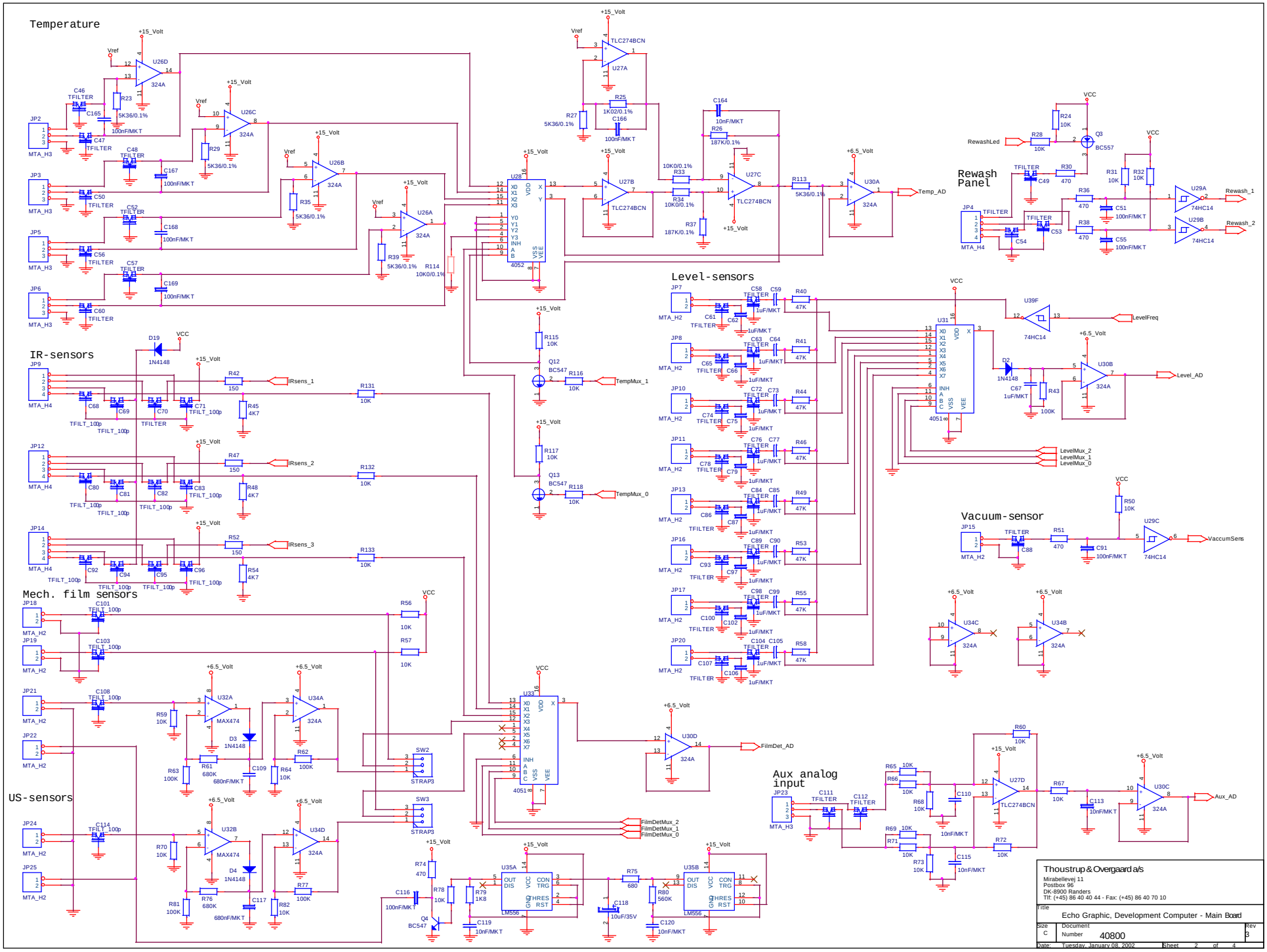
Temperature
IR-sensors
Mech. film sensors
US-sensors
Level-sensors
Rewash Panel
Vacuum-sensor
Aux analog input
Temp_AD
TempMux_1
TempMux_0
IRsens_1
IRsens_2
IRsens_3
LevelFreq
Level_AD
LevelMux_2
LevelMux_1
LevelMux_0
Rewash_1
Rewash_2
RewashLed
VaccumSens
FilmDet_AD
FilmDetMux_2
FilmDetMux_1
FilmDetMux_0
Aux_AD
Thoustrup & Overgaard a/s
Mirabellevej 11
Postbox 96
DK-8900 Randers
Tlf: (+45) 86 40 40 44 - Fax: (+45) 86 40 70 10
Title
Echo Graphic, Development Computer - Main Board
Size C
Document Number 40800
Rev 3
Date: Tuesday, January 08, 2002
Sheet 2 of 4