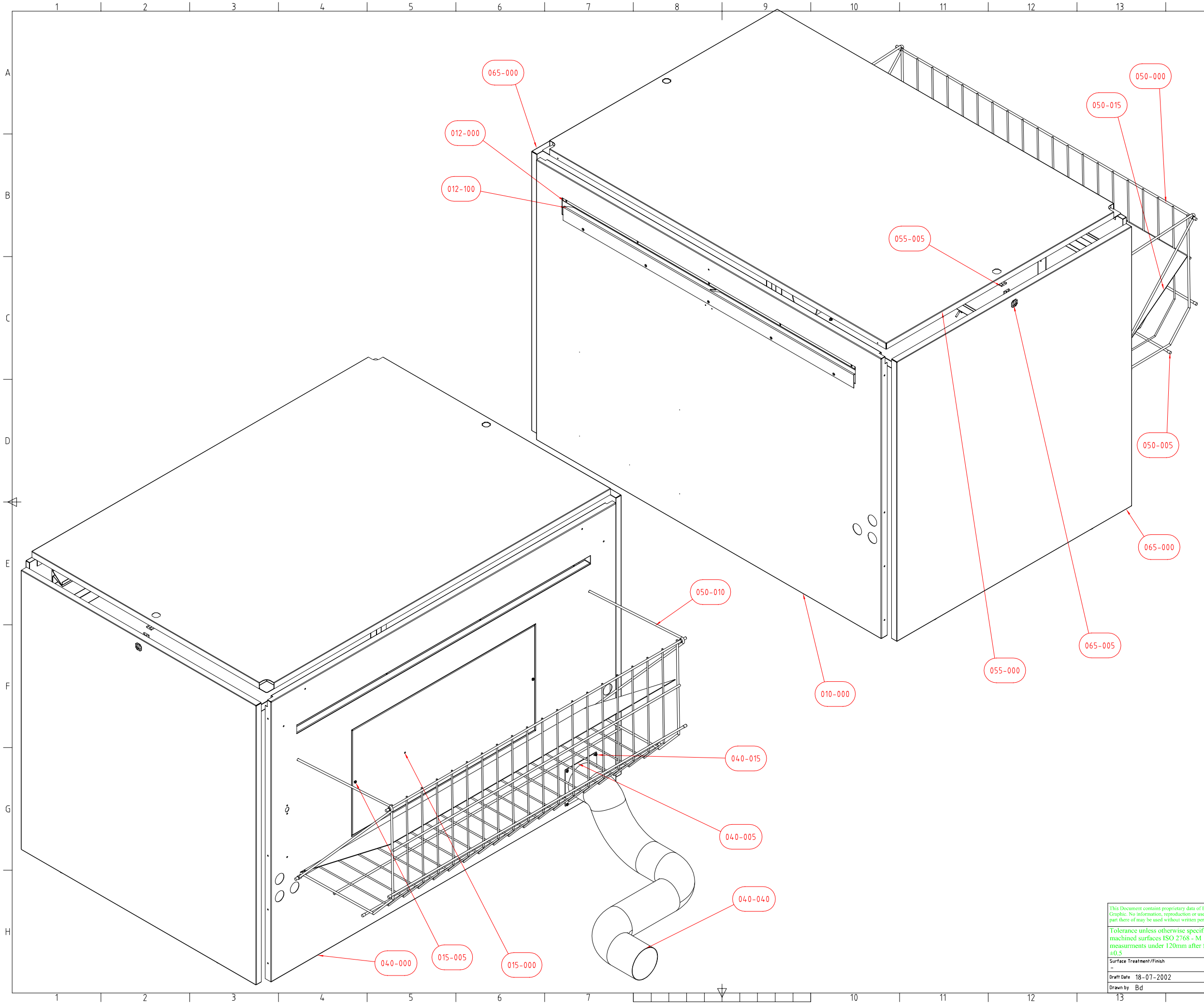

Parts List

Pos.	Dwg/part nr	Title	Pcs.
010	10-xxx		1
010-000	330202	Dev.endpl.EG114 Camera CPMZ	1
010-005	88392	Pop Rivet Type SS/D/43SS	21
010-100	305336	Foam Tightn Strip 20MMx20MM	250
012	12-xxx		1
012-000	330102	Inlet guide upper EG114 incl.	1
012-100	330100	Low inletguide EG114	1
015	15-xxx		1
015-000	305535	Lid f Chassis EG 2000 cpmz	1
015-001	66651	Groundwire 60cm 1,5mm2/ 2eyes	1
015-002	88023	Screw Mg 4x10 A4 Din 7985	2
015-003	88245	Lock Disc 4,3 MM A4 Din 6798	2
015-004	88152	Nut M4 A4 Din 934	4
015-005	88022	Screw PHRX 4x8 A4 Din 7985	2
015-010	88201	Spring Washer 4MM A4 Din 127B	2
015-015	88601	Lock Disc Seeger Ø3,2 Din6799	2
015-070	7077	Warning Label	1
040	40-xxx		1
040-000	330332	Dry endplate EG 1140 CPMZ	1
040-005	305333	Exhaust connect. ?100 RAL7047	1
040-010	88201	Spring Washer 4MM A4 Din 127B	4
040-015	88024	Screw M 4x12 PHX-Pozi 7985 A4	4
040-020	88152	Nut M4 A4 Din 934	4
040-030	88392	Pop Rivet Type SS/D/43SS	26
040-040	65727	Tube Wacuflex, Ø100	1
040-100	913751	Type Label	1
040-105	7123	CE label 20 x 24mm silver	1
050	50-xxx		1
050-015	330231	Bott.plate rec. basket CPMZ	1
050-000	330229	Receiving Basket EG114 CPMZ	1
050-010	316565	Holder for rec.basket CPMZ	2
050-005	217016	End fitting Ø6 black	8
055	55-xxx		1
055-000	330093	Lid dev/dry top, EG 1140,CPMZ	1
055-005	305227	Qlock 21mm f.20x20,1.5mm,CPMZ	2
065	65-xxx		1
065-000	316361	Sideplate EG E CPMZ	2
065-005	305227	Qlock 21mm f.20x20,1.5mm,CPMZ	2
065-010	9194	Grommet Ø11xØ15/19 1.5 plate	4
065-040	7057	Label Hope 5cm	2
065-045	7150	Label, EP 1140 black	2

This Document contains proprietary data of Echo Graphic. No information, reproduction or use of any part there of may be used without written permission.

Tolerance unless otherwise specified : machined surfaces ISO 2768 - M measurments under 120mm after folding ±0.5

>	≤	±
0.5	6	0.1
6	30	0.2
30	120	0.3
120	400	0.5
400	1000	0.8
1000	2000	1.2
2000	4000	2.0

Echo Graphic

Echo Graphic A/S
2. Haandvaerkervej
DK 9560 Hadsund
Denmark

Phone int.: +45 98 57 19 55
Fax int.: +45 98 57 15 91
e-mail: info@echographic.dk
www.echographic.dk

Surface Treatment/Finish: –	Material: –	Size: A1	Sheet Number: 1	Scale: 1:5
Draft Date: 18-07-2002	Drawing Title: Covering plates EP1140 CPMZ	DWG NO: 103541	REV: –
Drawn by: Bd			

19-07-2002 11:22:32, A3, 1:10.3055