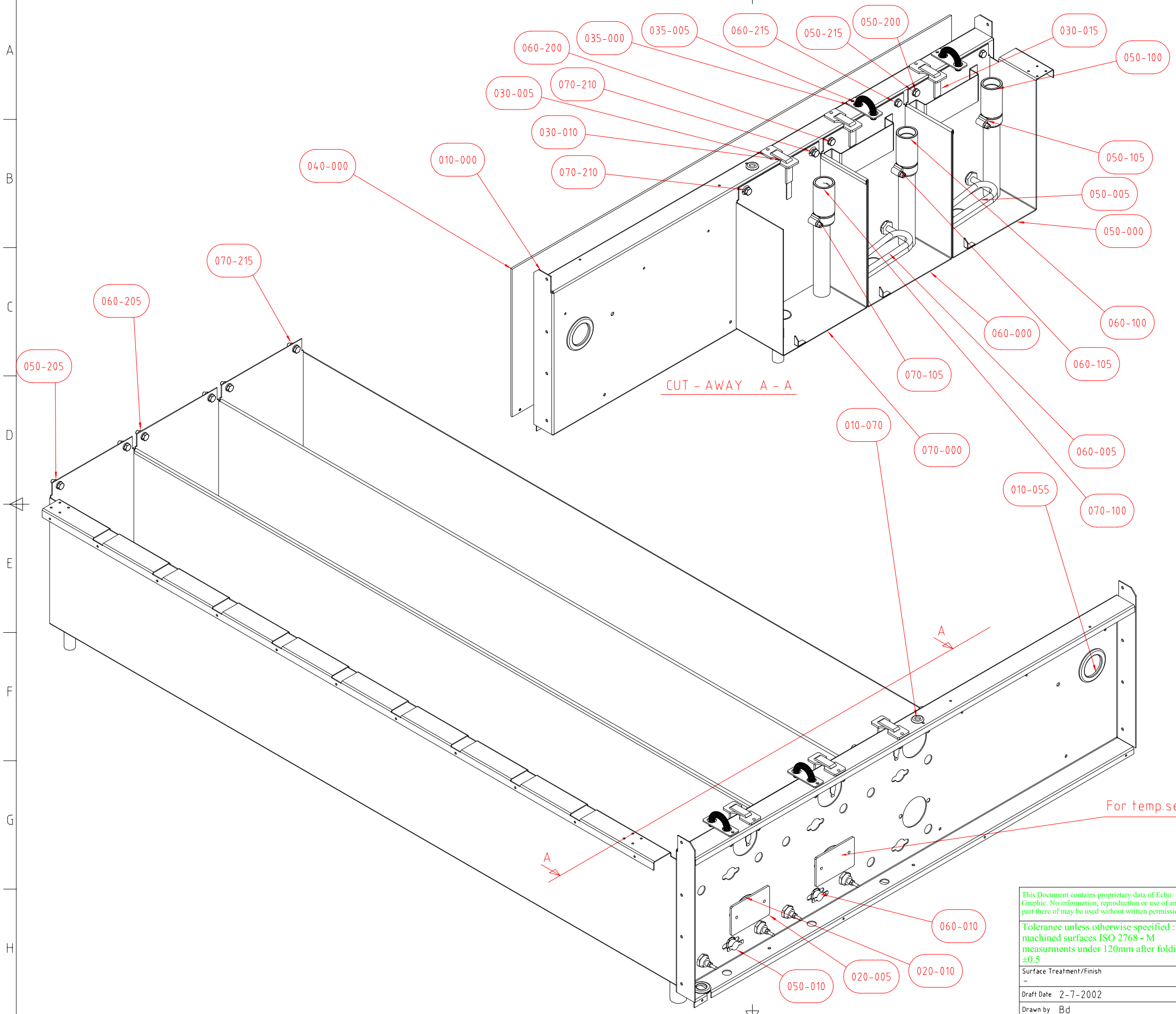

For temp.sensor see parts list: Electronics and cables EG

Parts List			
Pos.	Dwg/part nr.	Title	Pcs.
010	10-×××		1
010-000	316401	Tank support right EG750 E	1
010-005	88396	Pop rivet AISI305 ?4.1 max6.4	8
010-050	9160	Grommet Blanking Ø22/16mm PVC	1
010-055	9165	Grommet Blanking ?47/36 mm	1
010-060	809108	Strap fixing 12.7x maxØ50	1
010-065	88395	Pop rivet AISI305 ?4.1 max3.2	1
010-070	9126	Grommet Blanking Ø15/9 mm PVC	1
020	20-×××		1
020-005	305034	Cover f. temp. probe, EG	2
020-010	305137	Insulation disc sensor Ø50x8	2
030	30-×××		1
030-005	305024	Holder f. Niveau probe, EG	3
030-010	305036	Niveau Probe, EG, 69mm	2
030-015	305236	Niveau Probe, EG 83mm	1
035	35-×××		1
035-000	305014	Holder f. replenish tube, EG	2
035-005	305127	Spring 0,75x9 85mm long	2
040	40-×××		1
040-000	316103	Cover f. tank support R EG750	1
040-070	7077	Warning Label	1
050	50-×××		1
050-000	330051	Tank dev R44 EG 114	1
050-005	66107	Heating Element 750W Dev, Fix	1
050-010	65752	Safety Thermostat TP.161 50Øc	1
050-100	117317	Extension Pipe F.Tank Stuts	1
050-105	65208	Hose Clamps 19-28mm	1
050-200	88105	Screw Set Mg6x16 A4 Din 933	4
050-205	88154	M6 mØtrik (BN 31106) Type C	4
050-210	88203	M8 Fjederskive	5
050-215	88251	Disc Nylon Ø6,4x12x1	4
060	60-×××		1
060-000	330061	Tank fix R44 EG 114	1
060-005	66107	Heating Element 750W Dev, Fix	1
060-010	65752	Safety Thermostat TP.161 50Øc	1
060-050	65977	Polyethylenfolie 020	265
060-055	82027	Tape, Double Side 50MM	550
060-100	117317	Extension Pipe F.Tank Stuts	1
060-105	65208	Hose Clamps 19-28mm	1
060-200	88105	Screw Set Mg6x16 A4 Din 933	4
060-205	88154	M6 mØtrik (BN 31106) Type C	4
060-210	88203	M8 Fjederskive	3
060-215	88251	Disc Nylon Ø6,4x12x1	4
070	70-×××		1
070-000	330041	Tank wash R44 EG 114	1
070-100	117317	Extension Pipe F.Tank Stuts	1
070-105	65208	Hose Clamps 19-28mm	1
070-200	88105	Screw Set Mg6x16 A4 Din 933	4
070-205	88203	M8 Fjederskive	4
070-210	88251	Disc Nylon Ø6,4x12x1	4
070-215	88154	M6 mØtrik (BN 31106) Type C	4

This Document contains proprietary data of Echo Graphic. No information, reproduction or use of any part there of may be used without written permission.

Tolerance unless otherwise specified : machined surfaces ISO 2768 - M measurments under 120mm after folding ±0.5

>	≤	±
0.5	6	0.1
6	30	0.2
30	120	0.3
120	400	0.5
400	1000	0.8
1000	2000	1.2
2000	4000	2.0

Echo Graphic

Echo Graphic A/S
2. Haandvaerkervej
DK 9560 Hadsund
Denmark

Phone int.: +45 98 57 19 55
Fax int.: +45 98 57 15 91
e-mail: info@echographic.dk
www.echographic.dk

Surface Treatment/Finish: –

Material: –

Size: A2 | Sheet Number: 1 | Scale: 1:3.8

Draft Date: 2-7-2002

Drawn by: Bd

Drawing Title: Tank support,console right

DWG NO: 330530 | REV: –

02-07-2002 14:19:29, A3, 1:5.55205